9265

EUS

BMW Rear Differential Rubber Mount (Rear) Installer & Removal (F01/F02/F04/F06/F07/F10/F11/F12/F13/F18)

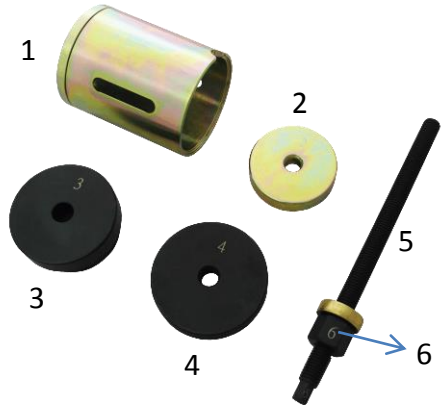

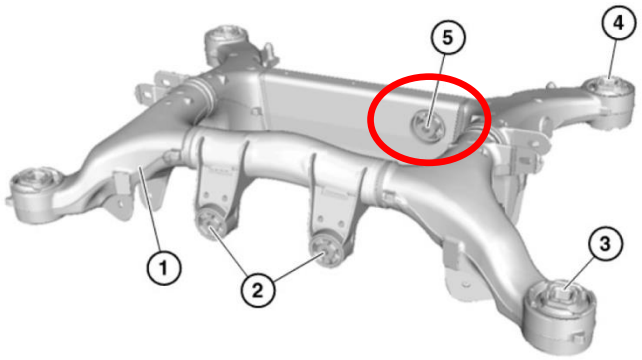

Important!
To ensure that the rear axle rubber mounts are securely seated in the rear axle support, observe a waiting period of 2 hours after pressing in the rubber mounts or before driving the vehicle for the first time. Failure to comply with this requirement may cause the rubber mounts to drift in the rear axle support!

REMOVAL

INSTALLATION

www.eustools.com.my

Features:
Replacing rubber mount for rear differential mounting at rear.
Applications:

Model	Chassis	Year
5’	F07	2009-2014
	F10	2010-2014
	F11	2010-2014
	F18	2011-2014
6’	F06	2009-2014
	F12	2009-2014
	F13	2010-2014
7’	F01	2007-2012
	F02	2011-2014
	F04	2008-2012

OEM Ref:330 030(330 031-036)